HAM-LET
INDUSTRIAL MECHANICAL
Pressure Gauges

PRESSURE GAUGES

HAM-LET®
ADVANCED CONTROL TECHNOLOGY

IMP

HAM-LET Industrial Mechanical **Pressure gauges**

Index

SELECTION GUIDE 367
Industrial Mechanical Pressure Gauges 368
Ordering Information 391
Dial Range Ordering Codes 392
Options Ordering Codes 393
Accessories 394

IMPH series
Heavy Duty
Page 371

IMPG series
General Use
Page 375

IMPS series
Safety Pattern/
Solid Front
Page 379

IMPP series
Process Gauge
Page 383

IMPL series
Low Pressure
Page 387

HAM-LET Pressure Gauges Process Connections

BSP-P Thread

NPT Thread

HAM-LET
Tube adapter

HAM-LET Face Seal
Male swivel

HAM-LET Face Seal
Female swivel

HAM-LET Pressure Gauges Selection Guide

Series	Type	Configuration			Liquid Fillable	Solid Front	Safety Glass Window	Adjustable Pointer	Accuracy	Case Size	Measurement Range
		C	B	L						mm (inch)	
Heavy Duty	H	Yes	-	Yes	Yes	-	Yes	-	1.6% ± EN 837 Class 1.6 (Class 2.5 for 0-600 & 0-1000 bar range)	40 (1.5)	Vacuum: -1 - 0 bar Pressure: 0 - 600 bar
		Yes	Yes	Yes	Yes	-	Yes	Yes		63 (2.5)	Vacuum: -1 - 0 bar Pressure: 0 - 1000 bar
		-	Yes	Yes	Yes	-	Yes	Yes	1.0% ± EN 837 Class 1.0	100 (4)	
		-	Yes	Yes	Yes	-	Yes	Yes		160 (6)	
General use	G	Yes	-	Yes	Yes	-	-	-	± 1.6% EN 837 Class 1.6 (Class 2.5 for 0-600 & 0-1000 (bar range	50 (2)	Vacuum: -1 - 0 bar Pressure: 0 - 600 bar
		Yes	Yes	Yes	Yes	-	Yes	-		63 (2.5)	Vacuum: -1 - 0 bar Pressure: 0 - 1000 bar
		-	Yes	Yes	Yes	-	Yes	-	± 1.0% EN 837 Class 1.0	100 (4)	
Safety Pattern / Solid Front	S	-	Yes	Yes	Yes	Yes	Yes	Yes	± 1.6% EN 837 Class 1.6 (Class 2.5 for 0-600 & 0-1000 bar range)	63 (2.5)	Vacuum: -1 - 0 bar Pressure: 0 - 1000 bar
		-	Yes	Yes	Yes	Yes	Yes	Yes	± 1.0% EN 837 Class 1.0	100 (4)	
		-	-	Yes	Yes	Yes	Yes	Yes		160 6	
Process	P	-	-	Yes	Yes	Yes	Yes	Yes	± 0.5% ASME B40.1 Grade 2A	115 (4.5)	Vacuum: -1 - 0 bar Pressure: 0 - 1000 bar
Low Pressure	L	Yes	-	Yes	Yes	-	Yes	-	± 1.6% EN 837 Class 1.6	63 (2.5)	Vacuum: -25 - 0 mbar Pressure: 0 - 600 mbar
		Yes	-	Yes	Yes	-	Yes	Yes		100 (4)	

Industrial Mechanical Pressure gauges:

Bourdon Tube Measuring Element

Coiled type

C type

General:

The Industrial Mechanical Pressure gauges are measuring devices constructed from only high quality materials, by the highest quality standards and methods.
The IMP gauge guarantee long life with durability for in-door and out-door industrial, process and instrumentation applications.

The IMP product variety in the catalog covers standard gauges, extensive options are available

Features:

- Nominal case sizes: 40, 50, 63, 100, 115, 160 mm (1½", 2", 2½", 4", 4½", 6").
- Pressure, Vacuum and Compound measuring ranges.
- Pressure ranges of 0-1 inH_2O up to 0-250 inH_2O (0-2.5 mbar up to 0-600 mbar), 0-10 up to 0-15,000 psi (0-0.6 up to 0-1000bar) and above.
- Accuracy of ± 0.5/1/1.6/2.5 % of span (EN 837-1 Class 1/1.6/2.5, ASME B40.1 Grade 1A/2A /B/C).
- Manufactured in accordance to EN 837 and ASME B40.1 standards.
- All wetted parts made of 316L Stainless Steel (Alloy 400 as an option).
- Connections include threaded, tube adapter and face seal.

Cleaning:

Special cleaning of wetted parts is available upon request –

- Lubricants free.
- Silicon free.
- Cleaned for Oxygen service.

Testing & Calibration:

All IMP gauges are factory calibrated and bubble tested for leakage.
Helium leak test is available.

Selecting Pressure Gauge For Your Application

Selecting the proper gauge to withstand application pressures, temperature, media's chemical effects and environmental conditions is a prime concern for the system engineer. The EN 837-2 or ASME B40.1 standard should be considered as a guideline for proper selection.
For assistance in matching the proper pressure gauge for your application, please consult a HAM-LET local representative.

Filling:

Gauge cases are often liquid filled to protect the internals against damages caused by severe vibrations or pressure pulsations and exclude condensation in outdoor installations.

All IMP gauges can be filled or unfilled as ordered, the gauges are always fillable.

- Standard filling is Glycerin (99%) .
- Glycerin (86%) for low ambient temperatures, Silicon oil, other filling as an option.

Warning!
Glycerin and Silicon oil must be avoided where Oxygen or other strong oxidizing agents are present.

Scale Selection And Load Limits:

General recommendation for working measured pressure is to be in the range of 25-65% for pulsating pressures and 25-75% for steady pressures out of the maximal dial range.

Recommended working pressure range

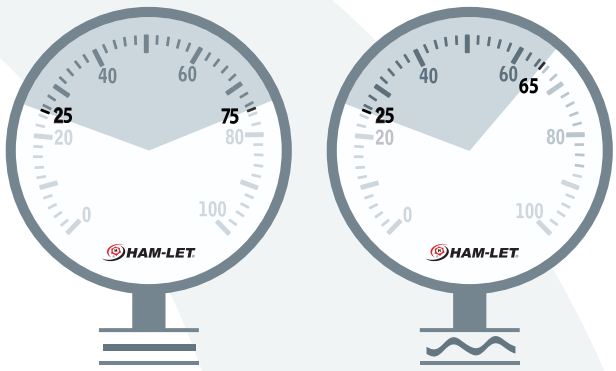

Steady Pressure **Pulsating Pressure**

Maximal pressure load limits for operation without loss of accuracy:

Case size: 100, 115, 160 mm (4",4½",6")	
Type of load	**Pressure load limit out of full scale**
Steady	100%
Pulsating (cyclic)	90%
Overpressure (temporary)	130%

Case size: 40, 50, 63 mm (1½",2",2½")	
Type of load	**Pressure load limit out of full scale**
Steady	75%
Pulsating (cyclic)	65%
Over pressure (temporary)	100%

The IMP gauges are constructed to withstand up to 300% full scale temporary over pressure without system failure.

With low pressure gauges (L series), up to 1000% full scale over pressure protection can be supplied as an option.

Process Connections:

Stainless steel process connections maximal pressure

Connection		Maximal Pressure
Type	**Size**	
BSP-P	1/8"	6,000 psi (400 bar)
NPT		
BSP-P	¼"	15,000psi (1000 bar)
NPT		
FACE SEAL	¼"	5,200psi (359 bar)
NPT	½"	15,000psi (1000 bar)
BSP-P	½"	20,000psi (1600 bar)
HP		
Tube Adapter	¼", 6mm	10,000psi (600 bar)
	3/8", ½",10mm,12mm	6,000 psi (400 bar)

Temperature limitations

Temperature Limitations	Unfilled	Glycerin (99%) Filled	Glycerin (86%) Low Temperature Filled
Storage	-40 to +158 °F	-4 to +158 °F	-4 to +158 °F
	(-40 to +70 °C)	(-20 to +70 °C)	(-20 to +70 °C)
Ambient	-40 to +140 °F	-4 to +140 °F	-40 to +140 °F
	(-40 to +60 °C)	(-20 to +60 °C)	(-40 to +60 °C)
Media Max. H,G,S Series	+392 °F	+212 °F	+212 °F
	(+200 °C)	(+100 °C)	(+100 °C)
Media Max. P,L Series	+212 °F	+158 °F	+158 °F
	(+100 °C)	(+70 °C)	(+70 °C)

Reference Temperature:

The measuring device is calibrated for working temperature of +68 °F (+20 °C).
A 0.4% deviation in the measured pressure for each +18 °F (+10 °C) temperature change should be expected.

For extreme ambient or media temperatures, please consult a HAM-LET local representative.

Warning!

The system designer and user have the sole responsibility for selecting products suitable for their special application requirements, ensuring their safe and trouble-free installation, operation, and maintenance. Application details, material compatibility and product ratings should all be considered for each selected product. Improper selection, installation or use of products can cause property damage or personal injury.

Heavy Duty Pressure Gauges

IMPH series

IMPH series

Data Sheet:

General:

The industrial mechanical, **H**-Heavy duty pressure gauges series is designed to be used in industrial, instrumentation and process applications that require long durability with accuracy and easy maintainability for indoor, outdoor and harsh environments.

The H series pressure gauges are bourdon tube mechanical devices. Case sizes 40, 63, 100, 160mm (1½", 2½", 4", 6") are suitable for vacuum to pressure up to 1000bar (15,000psi).

Features:

- All stainless steel case and wetted parts.
- Bayonet ring and adjustable pointer for easy adjustment.
- Safety laminated glass front.
- Case is filled or fillable dry.
- Case protection: IP 65 (IP 54 for 160mm (6") case with range 30psi (2.5bar) and below).
- Safety category (EN 837-1) S1 for pressure gauges with blow-out device 100mm (4") and 63mm (2½") cases.
- **Measuring Ranges**
  - Vacuum: 30" Hg Vac. to 0 psi (-1 to 0 bar)
  - Compound: 30" Hg Vac. through 0 to 300 psi (-1 through 0 to 15 bar)
  - Pressure: 0 to 15,000 psi (0 to 1,000 bar), 40mm (1½") case up to 10,000psi (600 bar)

Materials Of Construction

Part		Material
Wetted Parts	Process connection	SS 316L
	Bourdon Tube	
Case		SS 304
Window		Laminated safety glass
Movement		Stainless steel
Dial		Aluminum (black figures, white background)
Pointer		Aluminum (black)

Technical data

Case Size		40mm (1½")	63mm (2½")	100mm (4")	160mm (6")
Accuracy	**Up to 6,000psi (400 bar)**	**±1.6% of span** EN 837-1 Class 1.6 ASME B40.1 Grade B	**±1.6% of span** EN 837-1 Class 1.6 ASME B40.1 Grade B	**±1.0% of span** EN 837-1 Class 1.0 ASME B40.1 Grade 1A	**±1.0% of span** EN 837-1 Class 1.0 ASME B40.1 Grade 1A
	10,000psi (600bar) and above (4)	**±2.5% of span** EN 837-1 Class 2.5 ASME B40.1 Grade C	**±2.5% of span** EN 837-1 Class 2.5 ASME B40.1 Grade C	**±1.0% of span** EN 837-1 Class 1.0 ASME B40.1 Grade 1A	**±1.0% of span** EN 837-1 Class 1.0 ASME B40.1 Grade 1A
Case Configurations	**Process connection position**				
	Mounting device (Optional)				
Process Connection	½", 12mm Tube adapter			+	
	3/8", 10mm Tube adapter		+		
	¼", 6mm Tube adapter	+	+		
	½" BSP-P/NPT			+	+
	¼" BSP-P/NPT	+ (1)	+	+	+
	1/8" BSP-P/NPT	+	+		
	M20x1.5			+	+
	M12x1.5	+ (1)	+	+	+
	¼" face seal Male/Female swivel	+	+		
Blow-Out Device	Blow-out device at the top of the case				+
	Blow-out plug in the back of the case, Ø 40mm (1½")			+	
	Blow-out plug at the top of the case		+		
Case Ventilation	By blow-out device / Plug		+		+
	Internal pressure compensation by pressure equalizing membrane	+ (2)		+	
Weight (3) Pound (Kg.)	Unfilled	0.15 (0.07)	0.40 (0.18)	1.33 (0.60)	2.43 (1.10)
	Filled	0.22 (0.10)	0.55 (0.25)	2.10 (0.95)	4.30 (1.95)

(1) Center back only
(2) For pressure ranges up to 0-200psi (0-16bar)
(3) Approx. without mounting device
(4) See Maximal pressure per connection type, page 370

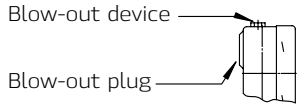

Configuration And Mounting Dimensions

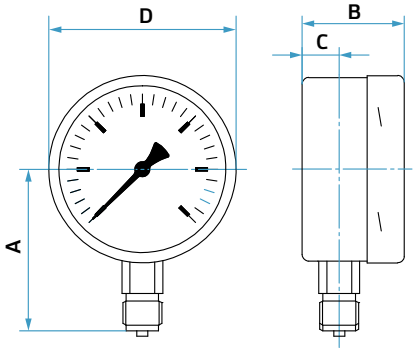

Lower Mount

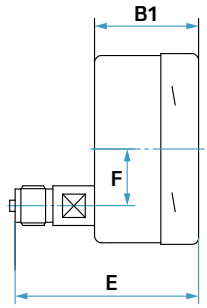

Lower Back Mount

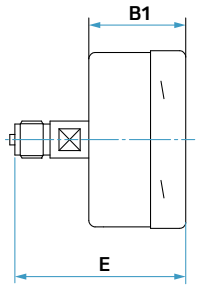

Center Back Mount

Case Size		A		B		B1		C		D		E		F	
mm	inch	mm	inch	mm	inch	mm	inch	mm	inch	mm	inch	mm	inch	mm	inch
40	1 1/2	34.5	1.36	28	1.1	30	1.18	10	0.4	40	1.57	47	1.85	-	-
63	2 1/2	54	2.13	33	1.3	37	1.46	10	0.39	64	2.52	59	2.32	18	0.71
100	4	87	3.43	55	2.17	55	2.17	20	0.79	101	3.98	97	3.82	30	1.18
160	6	115	4.53	51	2.01	51	2.01	15.5	0.61	161	6.34	92.5	3.64	30	1.18

Back Flange Mounting

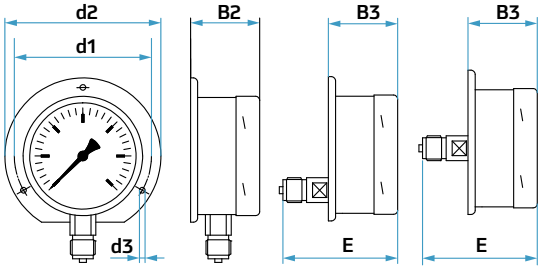

Front Flange Mounting

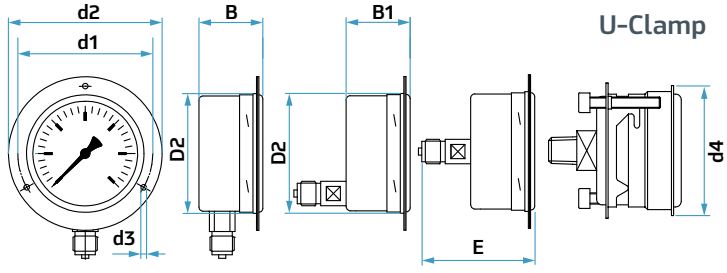

Case Size		B2		B3		D2		d1		d2		d3		d4	
mm	inch	mm	inch	mm	inch	mm	inch	mm	inch	mm	inch	mm	inch	mm	inch
40	2/1 1	-	-	-	-	41.8	1.64	51	2.01	61	2.4	3.6	0.14	46	1.81
63	2/1 2	36	1.42	40	1.57	66	2.6	75	2.95	85	3.35	3.6	0.14	-	-
100	4	58.5	2.3	58.5	2.3	103	4.06	116	4.57	132	5.2	4.8	0.19	-	-
160	6	54	2.13	54	2.13	163	6.42	178	7.01	196	7.72	5.8	0.23	-	-

General Use Pressure Gauges

IMPG series

IMPG series
Data Sheet:

General:

The Industrial, G – General Use pressure gauges series guarantee long life and durability for indoor, outdoor and harsh surroundings, industrial, instrumentation and process applications.

The G series pressure gauge is a bourdon tube mechanical device, Case sizes 50, 63, 100, 160mm (2", 2½", 4", 6") suitable for vacuum to pressure up to 1000bar (15,000psi).

Features:

- All stainless steel case and wetted parts.
- Polished Crimped-on ring for firm window sealing.
- Safety laminated glass front.
- Case is filled or fillable dry.
- Case protection: IP 65 (IP 54 for 160mm (6") case with range 30psi (2.5bar) and below).
- Safety category (EN 837-1) S1 for pressure gauges with blow-out device.
- **Measuring Ranges**
  - Vacuum: 30" Hg Vac. to 0 psi (-1 to 0 bar)
  - Compound: 30" Hg Vac. through 0 to 300 psi (-1 through 0 to 15 bar)
  - Pressure: 0 to 15,000 psi (0 to 1,000 bar), 50mm (2") case up to 10,000psi (600 bar)

Materials Of Construction

Part		Material
Wetted Parts:	Process Connection	SS 316L
	Bourdon Tube	
Case		SS 304L
Window		Laminated safety glass
Movement		Stainless steel
Dial		Aluminum (black figures, white background)
Pointer		Aluminum (black)

Technical data

Case Size		50mm (2″)	63mm (2½″)	100mm (4″)	160mm (6″)
Accuracy	**Up to 6,000psi (400 bar)**	**±1.6% of span** EN 837-1 Class 1.6 ASME B40.1 Grade B	**±1.6% of span** EN 837-1 Class 1.6 ASME B40.1 Grade B	**±1.0% of span** EN 837-1 Class 1.0 ASME B40.1 Grade 1A	**±1.0% of span** EN 837-1 Class 1.0 ASME B40.1 Grade 1A
	10,000psi (600bar) and above (2)	**±2.5% of span** EN 837-1 Class 2.5 ASME B40.1 Grade C	**±2.5% of span** EN 837-1 Class 2.5 ASME B40.1 Grade C	**±1.0% of span** EN 837-1 Class 1.0 ASME B40.1 Grade 1A	**±1.0% of span** EN 837-1 Class 1.0 ASME B40.1 Grade 1A
Case Configurations	**Process connection position**				
	Mounting device (Optional)	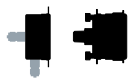			
Process Connection	½″, 12mm Tube adapter			+	
	3/8″, 10mm Tube adapter	+	+		
	¼″, 6mm Tube adapter	+	+		
	½″ BSP-P/NPT			+	+
	¼″ BSP-P/NPT	+	+	+	+
	1/8″ BSP-P/NPT	+	+		
	M20x1.5			+	+
	M12x1.5	+	+		+
	¼″ face seal Male/Female swivel	+			
Blow-Out Device	Blow-out device at the top of the case				+
	Blow-out plug in the back of the case, Ø 40mm (1½″)			+	
	Blow-out plug at the top of the case		+		
Case Ventilation	By blow-out device / Plug	+	+		+
	Internal pressure compensation by pressure equalizing membrane			+	
Weight (1) Pound (Kg.)	Unfilled	0.198 (0.09)	0.40 (0.18)	1.33 (0.60)	2.43 (1.10)
	Filled	0.286 (0.13)	0.55 (0.25)	1.98 (0.90)	3.75 (1.70)

(1) Approx. without mounting device
(2) See Maximal pressure per connection type, page 370

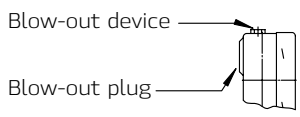

Configuration And Mounting Dimensions

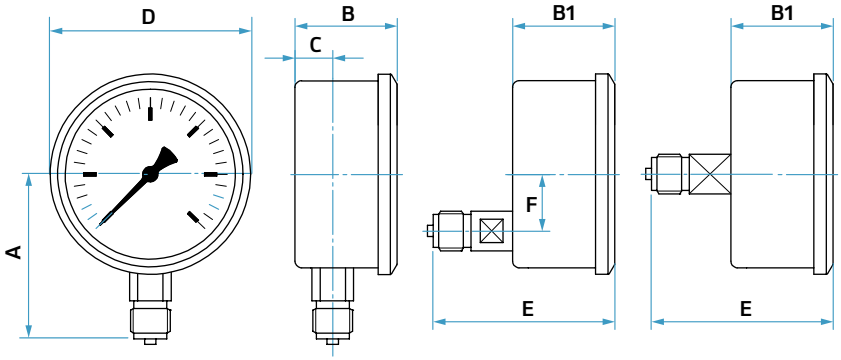

Lower Mount | Lower Back Mount | Center Back Mount

Case Size	A		B		B1		C		D		E		F	
mm	inch	mm	inch	mm	inch	mm	inch	mm	inch	mm	inch	mm	inch	mm	inch
50	2	45	1.77	29	1.14	31	1.22	10	0.4	54	2.13	50	1.97	-	-
63	2 1/2	54	2.13	33	1.3	37	1.46	10	0.40	67	2.63	60	2.36	18	0.71
100	4	87	3.43	54	2.13	54	2.13	20	0.79	106	4.17	96	3.78	30	1.18
160	6	115	4.53	50	1.97	55	2.17	15	0.59	167	6.57	97	3.82	30	1.18

Back Flange Mounting

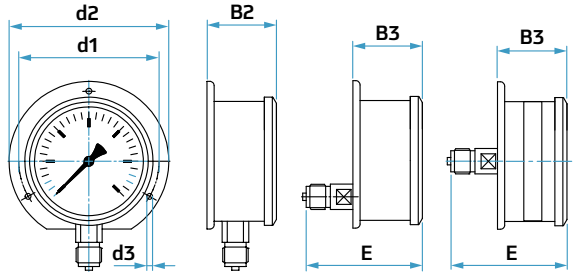

Front Flange Mounting

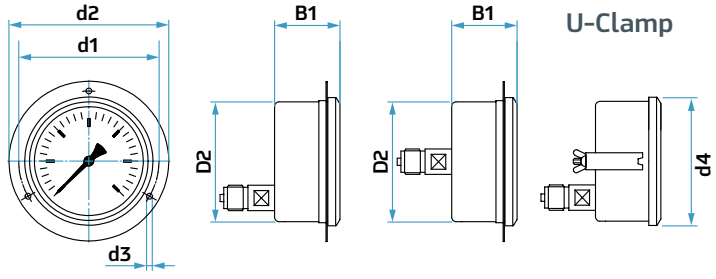

Case Size	B2		B3		D2		d1		d2		d3		d4	
mm	inch	mm	inch	mm	inch	mm	inch	mm	inch	mm	inch	mm	inch	mm	inch
50	2	-	-	-	-	51	2.01	60	2.36	71	2.8	3.6	0.14	71	2.8
63	2/1 2	36	1.42	40	1.57	64	2.52	75	2.95	85	3.35	3.6	0.14	-	-
100	4	57.5	2.26	57.5	2.26	101	3.98	116	4.57	132	5.2	4.8	0.19	-	-
160	6	53	2.09	58	2.28	-	-	178	7.01	196	7.72	5.8	0.23	-	-

HAM-LET
ADVANCED CONTROL TECHNOLOGY

PRESSURE GAUGES

Safety Pattern/Solid Front Pressure gauges

IMPS series

IMPS series
data sheet:

General:

The Industrial, S-Safety Pattern / Solid Front pressure gauges series is a heavy duty pressure gauge with a special case and a laminated safety glass window delivering a safer usage for the end system user while maintaining the long usability and durability for indoor, outdoor and harsh surroundings, industrial, instrumentation and process applications.
The safety pattern / Solid Front case has a break-proof solid front (a firm partition between the pressure element and the window) and a pressure relief back (blow-out back).
The S series gauges are marked with the Ⓢ symbol on the dial. The S series pressure gauge is a bourdon tube mechanical device, case sizes 63, 100, 160mm (2½", 4", 6") suitable for vacuum to pressure up to 1000bar (15,000psi).

Features:

- All stainless steel case and wetted parts.
- Bayonet ring and adjustable pointer for easy adjustment
- Break-proof solid front case with blow-out back.
- Safety laminated glass front.
- Case is filled or fillable dry.
- Case Protection: IP 65.
- Safety Category (EN 837-1) S3.
- **Measuring Ranges**
  - Vacuum: 30" Hg Vac. to 0 psi (-1 to 0 bar)
  - Compound: 30" Hg Vac. through 0 to 300 psi (-1 through 0 to 15 bar)
  - Pressure: 0 to 15,000 psi (0 to 1,000 bar)

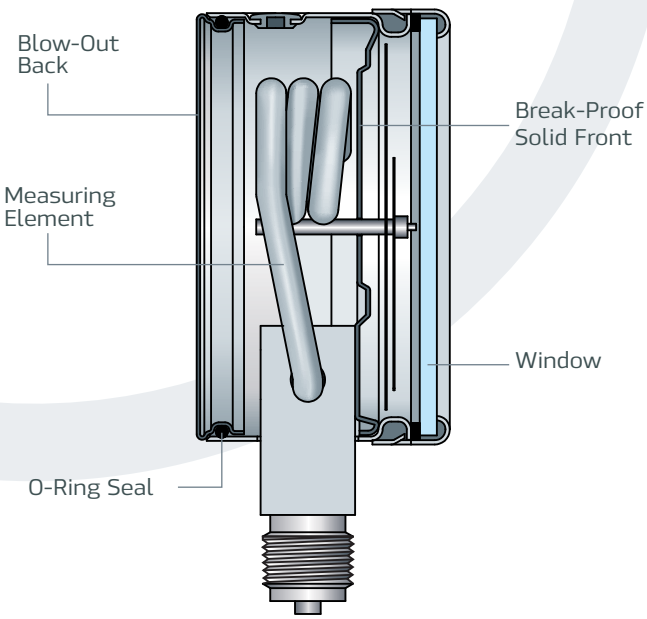

Materials of Construction

Part		Material
Wetted Parts:	Process Connection	SS 316L
	Bourdon Tube	
Case		SS 304L
Window		Laminated safety glass
Movement		Stainless Steel
Dial		Aluminum (black figures, white background)
Pointer		Aluminum (black)

Technical Data S Series

Case Size		63mm (2½")	100mm (4")	160mm (6")
Accuracy	**Up to 6,000psi (400 bar)**	**±1.6% of span** EN 837-1 Class 1.6 ASME B40.1 Grade B	**±1.0% of span** EN 837-1 Class 1.0 ASME B40.1 Grade 1A	**±1.0% of span** EN 837-1 Class 1.0 ASME B40.1 Grade 1A
	10,000psi (600bar) and above (2)	**±2.5% of span** EN 837-1 Class 2.5 ASME B40.1 Grade c	**±1.0% of span** EN 837-1 Class 1.0 ASME B40.1 Grade 1A	**±1.0% of span** EN 837-1 Class 1.0 ASME B40.1 Grade 1A
Case Configurations	**Process connection position**			
	Mounting device (Optional)			
Process Connection	½", 12mm Tube adapter		+	
	3/8", 10mm Tube adapter	+		
	¼", 6mm Tube adapter	+		
	½" BSP-P/NPT		+	+
	¼" BSP-P/NPT	+	+	+
	1/8" BSP-P/NPT	+		
	M20x1.5		+	+
	M12x1.5	+	+	+
Blow-Out Device	Blow-out back	+	+	+
Case Ventilation	Screw with ventilation bore	+	+	+
	Internal pressure compensation by pressure equalizing membrane	+	+	
Weight (1) Pound (Kg.)	Unfilled	0.39 (0.18)	1.40 (0.65)	3.30 (1.50)
	Filled	0.55 (0.25)	2.20 (1.00)	6.5 (2.95)

(1) Approx. without mounting device
(2) See Maximal pressure per connection type, page 370

Configuration And Mounting Dimensions

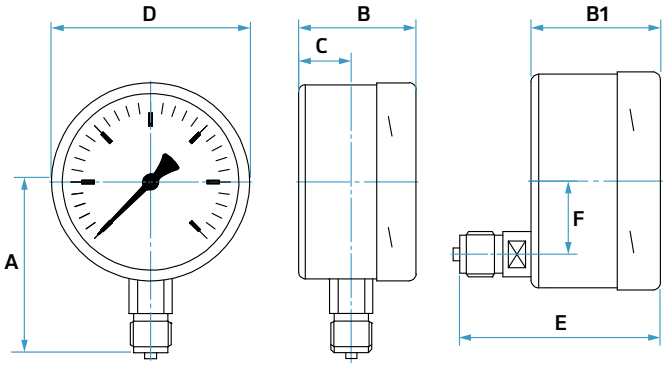

Lower Mount

Lower Back Mount

Case Size		A		B		B1		C		D		E		F	
mm	inch	mm	inch	mm	inch	mm	inch	mm	inch	mm	inch	mm	inch	mm	inch
63	2 1/2	54	2.13	41	1.61	41	1.61	18	0.71	64	2.52	63	2.48	18	0.71
100	4	87	3.43	60	2.36	60	2.36	27	1.06	101	3.98	93	3.66	34	1.34
160	6	115	4.53	78	3.07	78	3.07	40	1.57	161	6.34	-	-	-	-

Back Flange Mounting

Front Flange Mounting

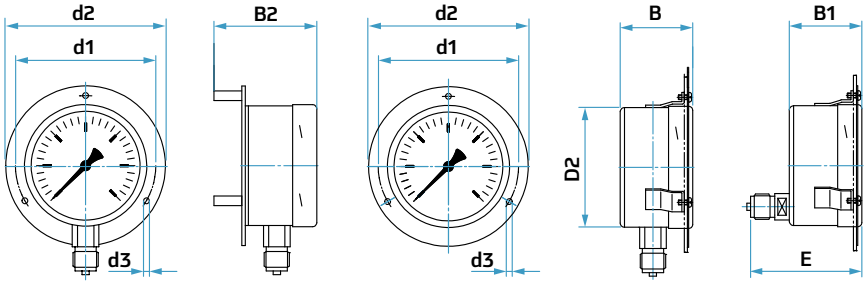

Case Size		B2		d1		d2		d3	
mm	inch	mm	inch	mm	inch	mm	inch	mm	inch
63	2/1 2	61	2.4	75	2.95	85	3.35	3.6	0.14
100	4	85	3.35	116	4.57	132	5.2	4.8	0.19
160	6	108	4.25	178	7.01	196	7.72	5.8	0.23

HAM-LET®
ADVANCED CONTROL TECHNOLOGY

PRESSURE GAUGES

Process Pressure gauges

IMPP series

IMPP series
data sheet:

General:

The Industrial, P – Process pressure gauge is a heavy duty pressure gauge with a special thermoplastic safety case for process industries, chemical, petro-chemical, gas and oil, and power plant applications with accordance to the ASME B40.1 standard.
The reinforced thermoplastic case and stainless steel wetted parts make the P pressure gauge suitable for service in corrosive areas and with aggressive media while maintaining a long life and durability for indoor and outdoor process applications.
The safety pattern case has a break-proof solid front (a firm partition between the pressure element and the window) and a pressure relief back (blow-out back).

The P series pressure gauge is a bourdon tube mechanical devices, of case sizes 4½" (115 mm).
suitable for vacuum to pressure up to 1000bar (15,000psi).

Features:

- Thermoplastic case with back mounting design.
- Stainless steel wetted parts.
- Adjustable pointer (Micro pointer) for easy adjustment.
- Break-proof solid front case with blow-out back.
- Safety laminated glass front.
- Case is filled or fillable.
- Case protection: IP 65.
- Compliance to ASME B40.1 standard grade 2A .
- Fire retardant and impact resistance according UL 94 V0.

Measuring ranges

- Vacuum: 30" Hg Vac. to 0 psi (-1 to 0 bar)
- Compound: 30" Hg Vac. through 0 to 300 psi (-1 through 0 to 15 bar)
- Pressure: 0 to 15,000 psi (0 to 1,000 bar).

Materials Of Construction

Part		Material
Wetted Parts:	Process connection	SS 316L
	Bourdon tube	
Case		Thermoplastic PBTP Black
Window		Laminated safety glass
Movement		Stainless Steel
Dial		Aluminum (black figures, white background)
Pointer		Aluminum (black)

Technical Data P Series

Case Size		4½" (115 mm)
Accuracy	**Up to 15,000psi (1000 bar)** (2)	**±0.5% of span** EN 837-1 Class 1.0 ASME B40.1 Grade 2A
Case Configurations	**Process connection position**	
	Built in Mounting	
Process Connection	½", 12mm Tube adapter	+
	½" BSP-P/NPT	+
	¼" BSP-P/NPT	+
Blow-Out Device	Blow-out back	+
Compensation Diaphragm	By blow-out device / Plug	+
	Internal Elastomer	+
Weight (1) Pound (Kg.)	Unfilled	1.88 (0.85)
	Filled	2.76 (1.25)

(1) Approx. without mounting device

(2) See Maximal pressure per connection type, page 370

Configuration And Mounting Dimensions

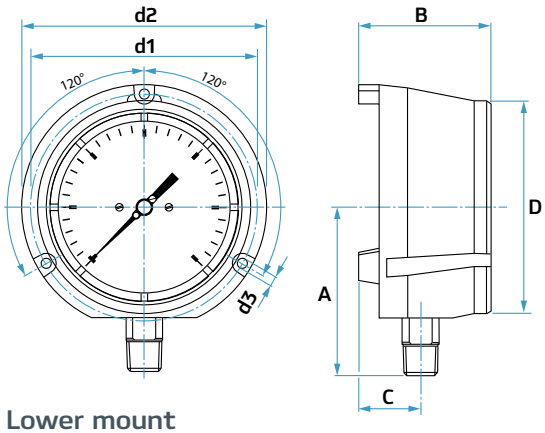

Lower mount

Case Size		A		B		C		D		d1		d2		d3	
mm	inch	mm	inch	mm	inch	mm	inch	mm	inch	mm	inch	mm	inch	mm	inch
115	41/2	102	4.02	80	3.15	37.5	1.48	129	5.08	137	5.39	148	5.83	6.1	0.24

HAM-LET
ADVANCED CONTROL TECHNOLOGY

Low pressures
Pressure gauges

IMPL
series

IMPL series
data sheet:

General:

The Industrial, L – Low pressures gauge series are gaseous media positive and negative low pressures measurement devices with long usability and durability for indoor, outdoor and harsh surroundings, industrial, instrumentation and process applications.

The L series pressure gauges is a capsule mechanical device, Case sizes 63, 100, 160mm (2½", 4", 6") are suitable for vacuum to pressure up to 250incH20 (600mbar)

Features:

- All stainless steel case and wetted parts.
- Bayonet ring.
- Front-sided screw for zero point adjustment with an adjusting range of ±5%.
- Case is filled or dry.
- Case protection: IP 54.
- **Measuring ranges**

- Vacuum/ Pressure: 0-1incH20 up to 0-250incH20 (0-2.5mbar up to 0-600mbar)
  For case size 63mm (2½") 0-25incH20 (0-25mbar) and up.
- Compound: -0.4-06incH20 up to -150-100incH20 (-1-1.5mbar up to -400-200mbar)
  For case size 63mm (2½") -4-6incH20 (-10-15mbar) and up.

Materials of Construction

Part		Material
Wetted Parts:	Process Connection	SS 316L
	Bourdon Tube	
Case		SS 304L
Window		Laminated safety glass
Movement		Stainless Steel
Dial		Aluminum (black figures, white background)
Pointer		Aluminum (black)

Technical Data L Series

Case Size		63mm (2½")	100mm (4")	160mm (6")
Accuracy		**±1.6% of span** EN 837-1 Class 1.6 ASME B40.1 Grade B	**±1.6% of span** EN 837-1 Class 1.6 ASME B40.1 Grade 1A	**±1.6% of span** EN 837-1 Class 1.6 ASME B40.1 Grade 1A
Case Configurations	**Process connection position**			
	Mounting device (Optional)			
Process Connection	½", 12mm Tube adapter		+	
	3/8", 10mm Tube adapter	+		
	¼", 6mm Tube adapter	+		
	½" BSP-P/NPT		+	+
	¼" BSP-P/NPT	+	+	+
	1/8" BSP-P/NPT	+		
	M20x1.5		+	+
	M12x1.5	+	+	+
Case Ventilation Filled Only	By blow -out device		+	
Weight [1] Pound (Kg.)	Unfilled	0.44 (0.20)	1.32 (0.60)	2.20 (1.00) [2]
	Filled	0.57 (0.26)	2.09 (0.95)	3.97 (1.80) [2]

(1) Approx. without mounting device.
(2) For 160mm (6") ≥ 25mbar - Unfilled 2.09 (0.95), Filled 3.97 (1.80).

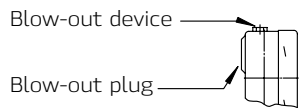

Configuration And Mounting Dimensions

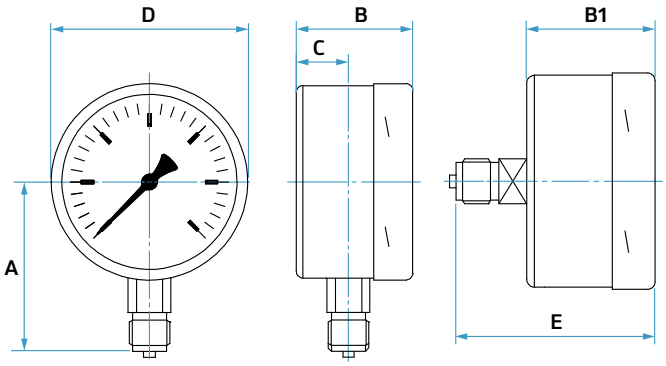

Lower Mount

Lower Back Mount

Case Size		A		B		B1		C		D		E	
mm	inch	mm	inch	mm	inch	mm	inch	mm	inch	mm	inch	mm	inch
63	21/2	54	2.13	38 (1)	1.5(1)	37	1.46	10	0.4	64	2.52	60	2.36
100	4	87	3.43	55	2.17	55	2.17	20 (2)	0.79 (2)	101	3.98	85	3.35
160 ≤6 incH^{2}0 (16mbar)	6	115	4.53	55	2.17	55	2.17	15	0.59	161	6.34	85	3.35
160 ≥10 incH^{2}0 (25 mbar)	6	115	4.53	51	2.01	51	2.01	15	0.59	161	6.34	81	3.18

Back Flange Mounting

Front Flange Mounting

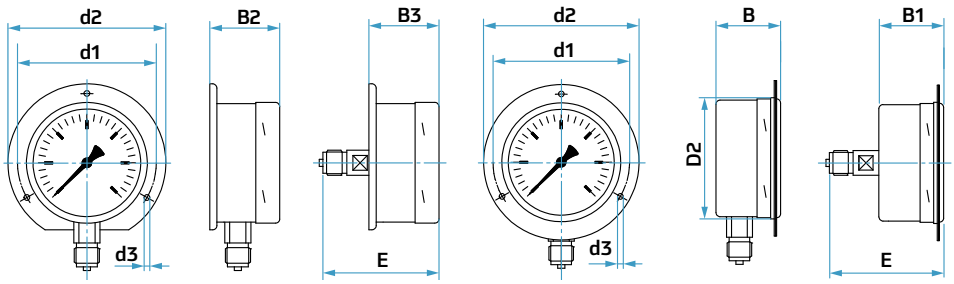

Case Size		B2		B3		D2		d1		d2		d3	
mm	inch	mm	inch	mm	inch	mm	inch	mm	inch	mm	inch	mm	inch
63	21/2	41 (1)	1.61 (1)	40	1.57	66	2.6	75	2.95	85	3.35	3.6	0.14
100	4	59	2.32	59	2.32	103	4.06	116	4.57	132	5.20	4.8	0.19
160 ≤6 incH^{2}0 (16mbar)	6	58	2.28	58	2.28	163	6.42	178	7.01	196	7.72	5.8	0.23
160 ≥10 incH^{2}0 (25 mbar)	6	54	2.13	54	2.13	163	6.42	178	7.01	196	7.72	5.8	0.23

(1) For case size 63 filled: B=47 mm (1.85 inch), B2=50 mm (1.97 inch)
(2) For range ≤ 6 incH2O (16mbar): C=15.5 mm (0.61 inch)

Ordering Information For Industrial Mechanical Pressure Gauges

OPTIONAL

IMP	H	10	–	L	P	1/4	N	–	B	P025	E	–	

See page 393

Industrial Mechanical Pressure gauge

Series

H -	Heavy duty
G -	General use
S -	Safety pattern
L -	Low pressures
P -	Process

Gauge size

	mm	inch
40 -	40	11/2
50 -	50	2
63 -	63	21/2
10 -	100	4
11 -	115	41/2
16 -	160	6

Process Connection Type

	Connection type	Connection Size	
P -	BSP-P	**1/8, 1/4, 1/2**	inch
N -	NPT	**1/8, 1/4, 1/2**	inch
M -	Metric (Mx1.5)	**12M, 20M**	mm
T -	Tube adapter	**06M,10M,12M** **1/4 ,3/8 ,1/2**	mm inch
V -	Face Seal Male swivel	**1/4**	inch
F -	Face Seal Female swivel	**1/4**	inch
H -	High pressure	**16m** **916**	inch (9/16) inch

Process Connection Location

L	Lower mount	
B	Lower Back mount	
C	Center Back mount	

Mounting Device

N -	None
R -	Rear Flange
F -	Front Flange
U -	U - Clamp

Dial Range Units

B -	bar
P -	psi
M -	milibar
K -	kPa
I -	MPa
H -	inH_2O
A -	psi/bar
C -	psi/kPa
D -	psi/kgf\cm^2
E -	bar/psi
F -	MPa/bar
G -	kPa/H_2O
T -	Meter
L -	kgf\cm^2
O -	mm H_2O
S -	Atmosphere

Case

D -	Dry
E -	Fillable (Empty)
G -	Glycerin (99%)
L -	Low Temperature Glycerin (86%)
S -	Silicon Oil

Dial Range

See Table page 392

Ordering Information For Certification

Accuracy, Material and various standards conformance certifications are available for ordering.

IMP	C	31	–	M	–	Blank

Industrial Mechanical Pressure gauge

Certificate

Class

00 -	General
21 -	2.1(1) - Pass / fail
22 -	2.2(1)- Inspection
31 -	3.1(1)- Test Results, Item approval

(1) According EN10204

Category

A -	Accuracy
M -	Material
S -	Standard conformance
T -	Quality Test

Type

Blank	-	General
GC	-	GOST - Customs declaration Russia
GR	-	GOST - R
TR	-	GOST-Type Russia
TU	-	GOST-Type Ukraine
TK	-	GOST-Type Kazakhstan
S	-	Standard conformance
BP600	-	Up to 600 bar (10,000 psi) scale
BP01K	-	Up to 1000 bar (15,000 psi) scale

Warning!

The system designer and user have the sole responsibility for selecting products suitable for their special application requirements, ensuring their safe and trouble-free installation, operation, and maintenance. Application details, material compatibility and product ratings should all be considered for each selected product. Improper selection, installation or use of products can cause property damage or personal injury.

Dial Range Ordering Codes

H,G,S,P Series

bar			psi			MPa		
Code	Min.	Max.	Code	Min.	Max.	Code	Min.	Max.
V001	-1	0	**V001**	30" Hg vac.	0	**V000**	-0.1	0.00
VP60	-0.6	0	**C015**	30" Hg vac.	15			
CP60	-1	0.6	**C030**	30" Hg vac.	30	**CP06**	-0.1	0.06
C1P5	-1	1.5	**C060**	30" Hg vac.	60	**CP15**	-0.1	0.15
C003	-1	3	**C100**	30" Hg vac.	100	**CP30**	-0.1	0.30
C005	-1	5	**C160**	30" Hg vac.	160	**CP50**	-0.1	0.50
C009	-1	9	**C200**	30" Hg vac.	200	**CP90**	-0.1	0.90
C015	-1	15				**C1P5**	-0.1	1.50
			P315	3	15			
PP21	0.2	1	**P010**	0	10			
PP60	0	0.6	**P015**	0	15			
P001	0	1				**PP10**	0	0.1
P1P6	0	1.6	**P030**	0	30	**PP16**	0	0.16
P2P5	0	2.5	**P060**	0	60	**PP25**	0	0.25
P004	0	4	**P100**	0	100	**PP40**	0	0.40
P006	0	6	**P160**	0	160	**PP60**	0	0.60
P010	0	10	**P200**	0	200	**P001**	0	1
P016	0	16	**P300**	0	300	**P1P6**	0	1.6
P025	0	25	**P600**	0	600	**P2P5**	0	2.5
P040	0	40	**P800**	0	800	**P004**	0	4
P060	0	60	**P01k**	0	1,000	**P006**	0	6
			P1k5	0	1,500			
P100	0	100	**P02k**	0	2,000	**P010**	0	10
P160	0	160	**P03k**	0	3,000	**P016**	0	16
P250	0	250	**P04k**	0	4,000	**P025**	0	25
			P05k	0	5,000			
P400	0	400	**P06k**	0	6,000	**P040**	0	40
			P10k	0	10,000			
P600	0	600				**P060**	0	60
P01k	0	1,000	**P15k**	0	15,000	**P100**	0	100

L Series

Milibar			kPa			in H20			psi		
Code	Min.	Max.	Code	Min.	Max.	Code	Min.	Max.	Code	Min.	Max.
V600	-600	0							**V010**	-10	0
			V050	-50	0	**V200**	-200	0			
V400	-400	0							**V005**	-5	0
V250	-250	0				**V100**	-100	0			
			V020	-20	0						
V160	-160	0									
			V015	-15	0	**V060**	-60	0			
V100	-100	0									
			V007	-7	0	**V030**	-30	0			
V060	-60	0									
			V005	-5	0	**V020**	-20	0			
V040	-40	0	**V004**	-4	0	**V015**	-15	0			
V025	-25	0									
V016	-16	0									
V010	-10	0									
V006	-6	0									
V004	-4.0	0									
V2P5	-2.5	0									
C200	-400	200									
C400	-200	400									
C150	-250	150									
C250	-150	250									
C100	-150	100									
C115	-100	150									
C160	-100	60									
C610	-60	100									
C040	-60	40									
C060	-40	60									
C020	-40	20									
C240	-20	40									
C015	-25	15									
C025	-15	25									
C010	-15	10									
C105	-10	15									
P003	0	3									
P004	0	4									
P006	0	6									
P010	0	10									
P016	0	16									
P025	0	25									
P040	0	40	**P004**	0	4	**P015**	0	15			
			P005	0	5	**P020**	0	20			
P060	0	60									
			P007	0	7	**P030**	0	30			
P100	0	100									
			P015	0	15	**P060**	0	60			
P160	0	160									
			P020	0	20						
P250	0	250				**P100**	0	100			
P400	0	400							**P005**	0	5
			P050	0	50	**P200**	0	200			
P600	0	600							**P010**	0	10

Options Ordering Codes

P	T	L	N	E	Y	6	X	R
Additional elements		Specials				Restriction screw	Variations	Special compatibility
Blank None	**Blank** None	**Blank**	**Blank**	**Blank** None	**Blank** None	**Blank** None	**Blank** None	**Blank**
P - Fix Pointer	**T -** Measuring point SS Plate	**L -** Lubricant free	**N-** Alloy 400 wetted parts	**E-** Helium leak test	**Y-** Vibration resistant movement	**0 -** Ø 0.0mm	**X -** Oxygen version	**G -** GOST - version
M - Min/Max Pointer		**S -** Silicon free				**3 -** Ø 0.3mm	**W -** Pure gases	**R -** GOST-T - Russia
						4 - Ø 0.4mm	**A -** Absolute pressure	**U -** GOST-T - Ukraine
						6 - Ø 0.6mm	**Z -** Grade 3A (ASME)	**K -** GOST-T - Kazakhstan
						8 - Ø 0.8mm		

Additional Elements

Fix Pointer: additional red pointer pointing to a designated pressure on the dial. The fix pointer dose not move with the measured pressure changes and it is used to point a fixed measure on the dial for the user.
Min/Max Pointer: additional red pointer pointing to the minimal or maximal pressure that was pointed to by the gauge main pointer. The Min/Max pointer has a mechanism to reset its position to the initial read ("0" read). The Min/Max pointer is moves with the main gauge pointer to the minimal or maximal pointing position and remains in this position when the pressure read is raises / drops respectively and it is used to point to the minimal / maximal pressure read over time.
Material heat stamp: is required whenever a Material certificate level 3.1 is requested to be supplied with the gauge. (See "Certification" for more information on Material certificate).

Specials

Lubricant free: The gauge is specially cleaned to have no oil leftovers on its internals. The lubricant free gauge is marked with a icon on its dial.
Silicon free: The gauge is specially cleaned to have no silicon leftovers on its internals.
Alloy 400 wetted parts: The gauge wetted parts are made of Alloy 400. Alloy 400 wetted parts are frequently used for measuring highly corrosive media. Other special wetted parts materials are available.
Helium leak test: The gauge is tested for leakage of up to 10^{-9} mbar l/s using pressurized Helium.

Restriction Screw:

A restriction screw with the designated bore is installed at the gauge media inlet, the restriction screw installation and firmly fixing is done at the manufacturing plant. The restriction screw is one mean of protecting the gauge from pulsating or temporary high pressures and it slows down the gauge pointer reaction to pressure changes. A gauge with a restriction screw should be more carefully checked for its inlet being free of blockage by particles, viscous media or other obstacles.

Variations

Oxygen version: The gauge is specially made to be used for oxygen measurement.

Special Compatibility:

The Gauge is manufactured to be compatible to the designated standard or regulation. A special compatible gauge is marked as required by the designated standard.

Mounting Device

Back Flange: The metal flange on the back of the gauge case is used to firmly mount the gauge on a panel/wall or any other fixing. The back flange is a firmly welded part of the gauge case and it guaranties the best support for the gauge.
Front Flange: The metal flange on the front of the gauge case is used to firmly mount the gauge on a panel or any other fixing with a hole to host the gauge. The front flange is a firmly welded part of the gauge case and it guarantees the best support for the gauge.
U-Clamp: The metal U shaped clamped with two fixing bolts supports the gauge from the back side of a panel hosting the gauge.

Accessories

Flame Arrester (ATEX Approved)

Flame Penetration Protection

Function
The Flame arrester avoids a flame penetration at deflagrations of potentially explosive vapor-air-resp. gas-air mixtures of explosion hazardous IIA, IIB and IIC in an upstreamed volume (e.g. pressure measuring instruments, chemical seals or similar).

Explosion Protection
The deflagration volume protection device corresponds as non-electrical equipment for potentially explosive areas with the harmonized norm DIN EN ISO 16852 "Flame Penetration Protection".
It is examined and approved as flame penetration protected at deflagration of flammable gases and liquids, according to EC-Type Examination Certificate / Approval PTB 12 ATEX 4001 X Explosion Protection Class IIG IIC.
The corresponding marking according to ATEX 94/9/EG is made at a suitable position of the instrument.

Construction:
as screw-adapter
½" BSP-P internal x ½" BSP-P
(others upon request)

HAM-LET
ASTAVA
Manifolds
see page 321

Pressure Gauge Cocks

Cocks Models

Class	DIN 16262		DIN 16263	
Type	M20x1.5	1/2" BSP-P	Test Flange 60x25x10mm (2.36x0.98x0.39 inch)	Test Connection Male Thread M 20x1.5
Process Connection	Male thread M 20x1.5	Male thread 1/2" BSP-P		
Instrument Connection	Clamping sleeve female M20x1.5	Clamping sleeve female 1/2" BSP-P		
Nominal Pressure	PN 16			
Handle	Plastic			
Material	- Brass (Clamping sleeve alloy steel phosphatized) - Alloy steel - Stainless steel 316 (1.4571)			

Applications
Fluid or gaseous media resp. steam at temperatures between -10 °C to +50 °C (14 °F to 122 °F) ; For connecting to a pressure gauge with flat sealing ring EN 837 (DIN 16 258).

Over Range Protector

The over range protector is a piston valve. The piston will remain in an "open" position as long as the pressure of the medium is lower than the back pressure imposed on the piston by the spring. As medium pressure accedes the spring back pressure, the piston will move towards the spring and the piston valve closes. After the medium pressure decreases by approximately 25% below the set closing pressure, the valve opens and the spring force causes the piston to return to its original "open" position.

The over range protector has been designed to protect pressure gauges against a pressure overload higher than the measuring range. It allows putting several gauges with different pressure ranges in ascending stages and makes it possible to read even low ranges in a precise way, when the total range is in fact much higher.
The valves are not suitable for use as regulators.

Models: Brass, Stainless steel.

Available Ranges:	
PSI	BAR
3-35	0.4-2.5
30-85	2-6
75-350	5-25
300-850	20-30
750-3600	50-250
3500-5800	240-400

Pressure Gauge Valves

According to DIN 16270, DIN 16271 with Male Test Connection, and with Test Flange

Valves Models

Versions	Type	Process Connection	Gauge Connection	Test Connections
DIN 16 270	BSP-P	½" BSP-P male	adjusting nut ½" BSP-P female	M 20x1,5
	Metric	M20x1,5 male	adjusting nut M20x1,5 female	
DIN 16 270 with fitting for gauge holder bracket	BSP-P	½" BSP-P male	turnable nut ½" BSP-P female	
DIN 16 271	BSP-P	½" BSP-P male	adjusting nut ½" BSP-P female	
	Metric	M20x1,5 male	adjusting nut M20x1,5 female	
DIN 16 271 with fitting for gauge holder bracket	BSP-P	½" BSP-P male	turnable nut ½" BSP-P female	
Similar to DIN 16 271 with test flange	BSP-P	½" BSP-P male	adjusting nut ½" BSP-P female	flange 60 x 25 x 10 mm

Material of construction

Versions		Brass	Alloy Steel	Stainless Steel
All Models	Components:	Material (DIN material numbers)		
	Body	Brass	SS (1.0460)	SS (1.4571)
	Valve spindle	SS (1.4104)		
	Valve cone	SS (1.4034 hardened)		
	Packing	PTFE	Graphite	PTFE
	Union nut	Alloy steel		SS (1.4571)
	Adjusting nut			
	Turnable nut	Brass	Alloy steel	
	Vent screw	SS (1.4104)		
	Hand wheel	Plastic		
	Temperature rating	-10 / + 120 °C (14 / 248 °F)		-40 / +200 °C (-40 /+392 °F)

Ball Shock Absorber

Ball shock absorbers are designed to protect pressure instruments against re impacts.
In case of pressure drops or pressure peaks the media moves the stainless steel ball within the inlet port and damps the appropriate bore.
The counter direction has free flow.
In case of order it must be clarified if the ball shock absorber is used for pressure peaks (marked with + on the body) or pressure drops (marked with - on the body)

Construction:
Made of 316L stainless steel or brass with male and female thread 1/2" BSP or NPT.

Application:
Material test machines, hydraulic accumulators, hydraulic clamping devices.